GC2201iW 24 C 23

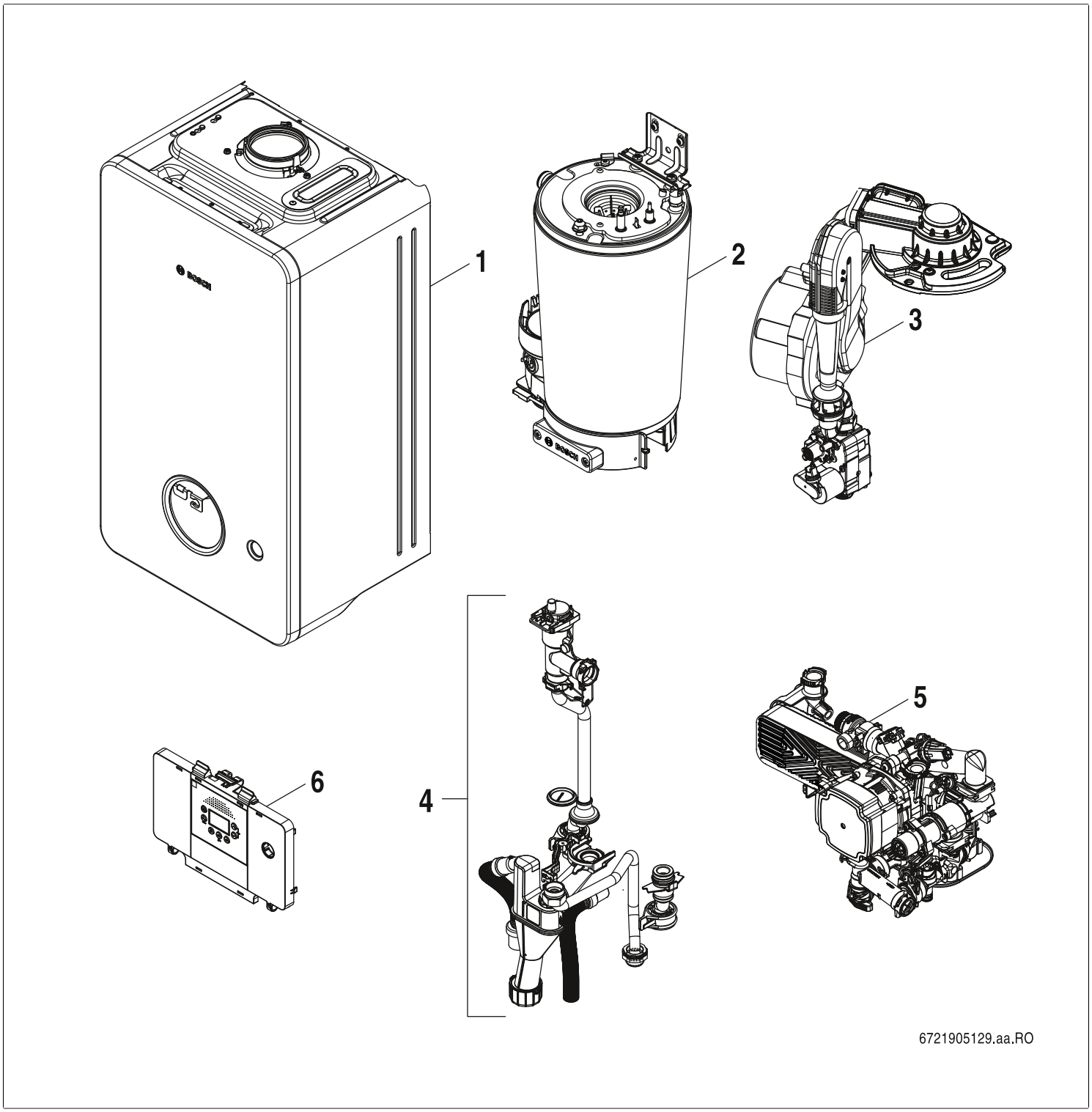

[de] Wichtige Hinweise zur Installation/Montage
Die Installation/Montage muss durch eine für die Arbeiten zugelassene Fachkraft unter Beachtung der geltenden Vorschriften erfolgen.

[en] Important notes on installation/assembly
The installation/assembly must be carried out by a qualified contractor, following these instructions and in compliance with the applicable regulations.

[fr] Instructions importantes pour l'installation/le montage
L'installation/le montage doit être effectué(e) par un spécialiste qualifié pour les opérations concernées et dans le respect de la présente notice et des prescriptions applicables.

[bg] Важни указания във връзка с инсталацията/монтажа
Инсталацията/монтажът трябва да се извършва от лицензиран за работите специалист в съответствие с настоящото ръководство и с приложимите разпоредби.

[cs] Důležité pokyny k instalaci/montáži
Instalaci/montáž musí při dodržení pokynů uvedených v tomto návodu a platných předpisů provést odborný pracovník s příslušným oprávněním pro tyto práce.

[da] Vigtige anvisninger til installationen/monteringen
IInstallationen/monteringen skal foretages af en godkendt installatør under overholdelse af denne vejledning og de gældende forskrifter.

[el] Σημαντικές υποδείξεις για την εγκατάσταση/συναρμολόγηση
Η εγκατάσταση/τοποθέτηση πρέπει να ανατίθεται σε εκπαιδευμένο για τις συγκεκριμένες εργασίες τεχνικό προσωπικό με τήρηση αυτών των οδηγιών καθώς και των σχετικών προδιαγραφών.

[es] Indicaciones importantes para instalación/montaje
La instalación/el montaje debe realizarla personal especializado que esté autorizado para realizar estos trabajos y que tenga en cuenta estas instrucciones y la normativa vigente.

[et] Olulised juhised paigaldamiseks/montaažiks
Paigaldamist/montaaži tohib läbi viia vaid selleks volitusi omav spetsialist, arvestades kehtivaid nõudeid.

[nl-BE] Belangrijke aanwijzingen betreffende de installatie/montage
De installatie/montage moet worden uitgevoerd door een voor de werkzaamheden geautoriseerde installateur rekening houdend met deze handleiding en de geldende voorschriften.

[fi] Tärkeitä asennus- ja kokoonpano-ohjeita
Näihin töihin hyväksytyn ammattiasentajan pitää suorittaa asennus- ja kokoonpanotyöt voimassa olevien määräysten mukaisesti.

(hr) Važne upute za Instalaciju/Montažu
Instalacija/montaža mora biti izvedena od strane kvalificiranog stručnog osoblja, poštujući ove Upute i u skladu sa važećim propisima.

[hu] Fontos tudnivalók az installáláshoz/szereléshez
A telepítést/szerelést egy, a munkálatokra felhatalmazott szakembernek kell végeznie, jelen utasítás és az érvényes előírások figyelembevétele mellett.

[it] Avvertenze importanti per l'installazione/il montaggio
L'installazione/il montaggio deve aver luogo ad opera di una ditta specializzata ed autorizzata in osservanza di queste istruzioni e delle direttive vigenti.

[ka] მნიშვნელოვანი მითითებები ინსტალაციისთვის/მონტაჟისათვის
ინსტალაცია/მონტაჟი უნდა განხორციელდეს სამუშაოებისთვის დაშვებული კვალიფიციური პერსონალის მიერ, მოქმედი განაწესის დაცვით.

[lt] Svarbios instaliavimo ir (arba) montavimo nuorodos
Instaliavimo/montavimo darbus, laikydamiesi šios instrukcijos reikalavimų ir galiojančių taisyklių, privalo atlikti šiems darbams įgalioti specialistai.

[sq] Shënime të rëndësishme për instalimin/montimin
Instalimi/montimi duhet të bëhet nga një kontraktues i kualifikuar, duke ndjekur këto udhëzime dhe në përputhje me rregulloret në fuqi.

[lv] Svarīgi norādījumi par iekārtas uzstādīšanu / montāžu
Uzstādīšanu/montāžu jāveic atbilstošajiem darbiem sertificētam speciālistam, ievērojot šo instrukciju un spēkā esošos noteikumus.

[nl] Belangrijke aanwijzingen betreffende de installatie/montage
De installatie/montage moet door een erkend installateur volgens de geldende voorschriften worden uitgevoerd.

[no] Viktig informasjon om installasjon/montering
Installasjonen/monteringen skal gjennomføres av autoriserte installatører, og installasjonsanvisningen samt gjeldende forskrifter skal følges.

[pl] Ważne wskazówki dotyczące instalacji/montażu
Instalację/montaż powinien wykonać specjalista uprawniony do tego typu prac z uwzględnieniem informacji podanych w niniejszej instrukcji oraz aktualnie obowiązujących przepisów.

[pt] Indicações importantes relativas à instalação/montagem
A instalação/montagem deve ser efectuada por um técnico autorizado para os trabalhos, respeitando este manual e as prescrições válidas.

[ro] Indicaţii importante privind instalarea/montajul
Instalarea/montajul trebuie realizate de către un specialist autorizat pentru lucrările respective, respectându-se prezentele instrucţiuni şi prescripţiile valabile.

[ru] Важные указания по подключению/монтажу
IПодключение/монтаж должны выполнять только специалисты, имеющие допуск к выполнению таких работ, при соблюдении требований этой инструкции и действующих норм и правил.

[sk] Dôležité pokyny týkajúce sa inštalácie/montáže
Inštaláciu/montáž musí vykonať odborný personál, ktorý má oprávnenie pre výkon týchto prác, pričom musí dodržiavať pokyny uvedené v tomto návode a platné predpisy.

[sl] Pomembni napotki za namestitev/montažo
Inštalacijo/montažo lahko izvede samo pooblaščen strokovnjak ob upoštevanju teh navodil in veljavnih predpisov.

[sr] Važna uputstva za ugradnju i montažu
Ovu instalaciju/montažu moraju da obave stručna lica koja su ovlašćena za obavljanje takvih radova u skladu sa ovim uputstvom i važećim propisima.

[sv] Viktiga anvisningar för installation/montering
Installationen/monteringen måste utföras av en behörig och tekniskt utbildad person enligt denna anvisning samt gällande föreskrifter.

[tr] Kurulum/Montaj ile ilgili önemli uyarılar
Kurulum/montaj, bu çalışmaları yapmasına müsaade edilen uzman kişiler tarafından işbu kılavuz ve geçerli yönetmelikler dikkate alınarak yapılmalıdır.

[uk] Важливі вказівки щодо установки/монтажу
Встановлення/монтаж повинні виконувати фахівці, що допущені до виконання таких робіт, із дотриманням цієї інструкції та діючих приписів.

[zh] 安装方面的重要提示
安装和组装工作必须由经过许可的专业人员进行,
同时必须遵守本说明 书和现行法规的相关要求

[ar] ملاحظات هامة للتركيب/التجميع
يجب أن يتم التركيب/التجميع من قبل متخصص مصرح له بالعمل، مع مراعاة اللوائح السارية.

[fa] تذکرات مهم درباره نصب/مونتاژ
نصب/مونتاژ باید توسط فردی حرفه ای که مجاز به انجام این کار است، و همچنین با توجه کامل به مقررات مربوطه انجام شود.

[az] Quraşdırılma
Quraşdırılma işinin yerinə yetirilməsi səlahiyyətli bir mütəxəssis tərəfindən və müvafiq qaydalara uyğun olaraq aparılmalıdır.

Yedek Parça Listesi
Spare parts list

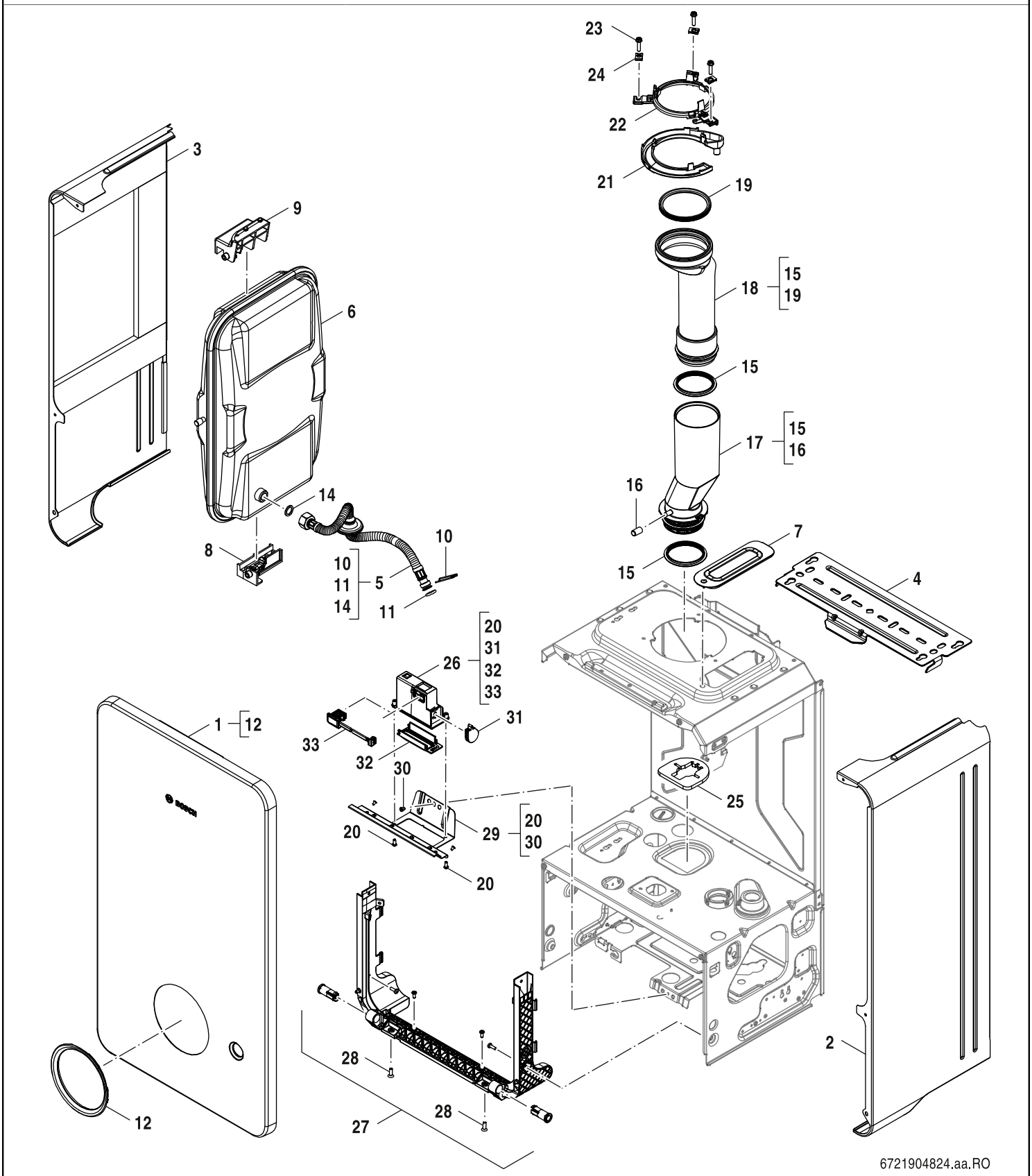

Sac Parcalari
Sheet metal

1

GC2201iW 24 C 23

Pos	Aciklamalar Description	Ordering no. Ordering no.	7-736-902-322															Notlar Remarks
1	Kapak	8 737 602 612	■															
2	Yan Kapak RHS	8 737 602 610	■															
3	Yan Kapak LHS	8 737 602 609	■															
4	Tespit Sacı	8 737 602 306	■															
5	Boru (Genlesme Tanki)	8 737 604 682	■															
6	Genleşme Tankı	8 718 650 655 0	■															
7	Koruma Sacı	8 737 602 307	■															
8	Tutucu (Genleşme Tankı)	8 737 602 309	■															
9	Tutucu (Genleşme Tankı)	8 737 602 308	■															
10	Segman (5x)	8 718 641 029 0	■															
11	O-Ring 12,37x2,62 EPDM	8 722 880 163 0	■															
12	Kapak	8 737 602 611	■															
14	Conta 18,6x13,5x1,5 (10x)	8 710 103 045 0	■															
15	Conta Ø70mm	8 737 902 750 0	■															
16	Kapak (1x)	8 737 902 864 0	■															
17	Atıkgaz Borusu (Alt)	8 718 650 987 0	■															
18	Atıkgaz Borusu (Üst)	8 718 650 986 0	■															
19	Conta Ø80mm	8 737 902 970 0	■															
20	Cıvata B4x10-St-H	2 914 211 302 0	■															
21	Baglanti Saci	8 718 650 036 0	■															
22	Tutucu (Atıkgaz Borusu)	8 718 682 454 0	■															
23	Vida No.10x20 altıgen flanş kafası (3x)	8 716 109 363 0	■															
24	Sac Somun 4,8mm (10x)	8 710 609 015 0	■															
25	Kurşun mühür	8 716 121 870	■															
26	Gövdesi (KEY)	8 737 604 652	■															
27	Braket U	8 737 602 979	■															
28	Vida M5x15 (10x)	8 737 603 843	■															
29	Tespit Saci (Ip PluX)	8 737 604 681	■															
30	Cıvata M4x6 (10x)	8 719 905 146 0	■															
31	Kilit (PluX)	8 737 709 149	■															
32	Kapak (Ip PluX)	8 737 709 148	■															
33	Kablo KEY	8 737 602 652	■															

GC2201iW 24 C 23

Sac Parcalari
Sheet metal

1

Yedek Parça Listesi
Spare parts list

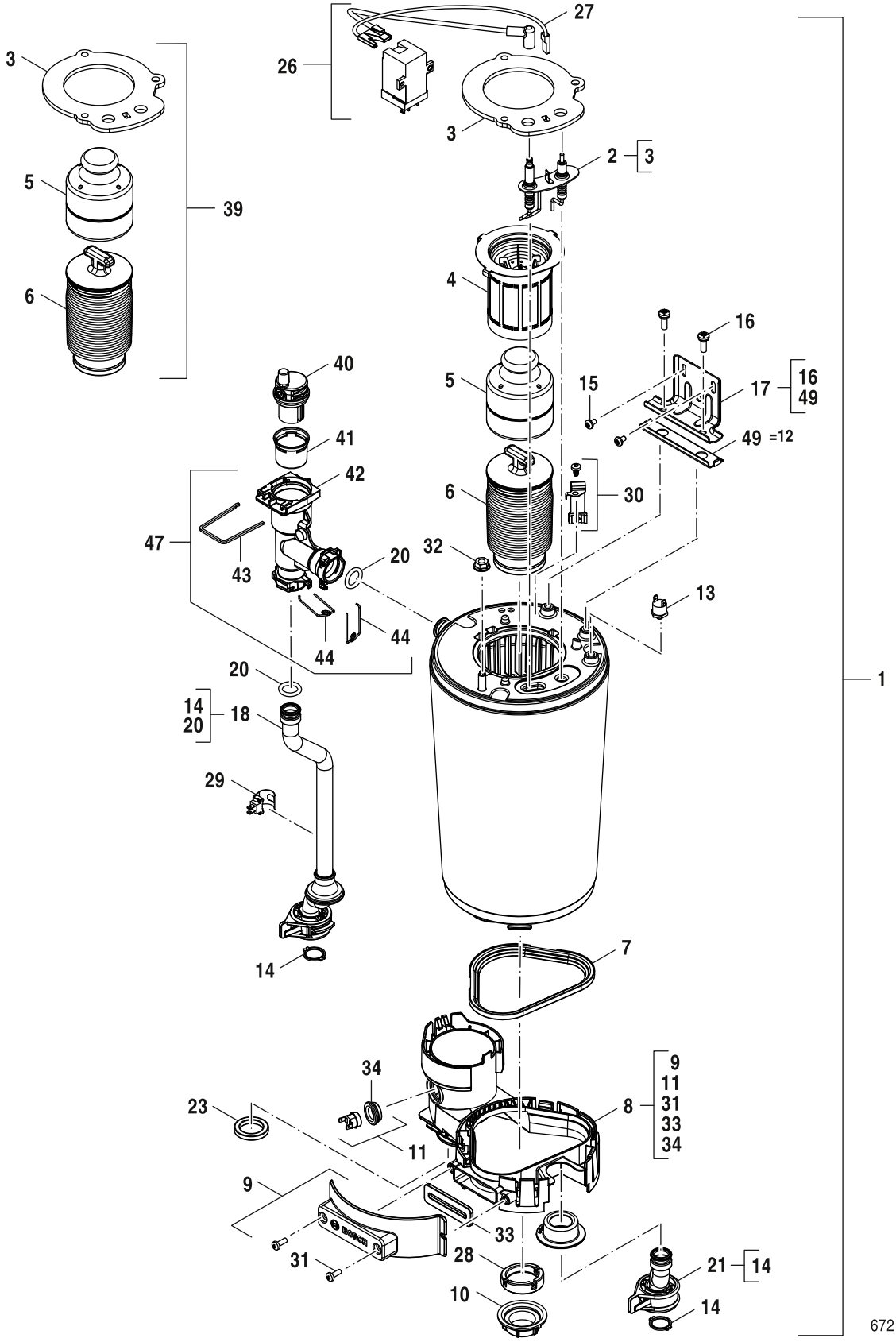

Esanjör
Heat exchanger

2

GC2201iW 24 C 23

Pos	Aciklamalar Description	Ordering no. Ordering no.	7-736-902-322															Notlar Remarks
1	Esanjör 30 kW	8 737 604 654	■															
2	Elektrod Seti	8 737 903 536 0	■															
3	Brülör Contası	8 718 650 789 0	■															
4	Brülör 30 kW	8 718 650 984 0	■															
5	Isi Yönlendirici	8 715 405 197 0	■															
6	Isı Yönlendirici	8 737 602 342	■															
7	Conta	8 718 651 071 0	■															
9	Kilit Kondens Suyu Kabi	8 718 651 243 0	■															
10	Somun	8 713 301 196 0	■															
11	Sıcaklık Limitörü	8 710 506 267 0	■															
13	Sıcaklık Regülatörü	8 737 903 399 0	■															
14	Conta 18.5x24.3mm (10x)	8 716 771 259 0	■															
15	Vida M5x8 (10x)	8 737 602 552	■															
16	Vida M6x18 (10x)	8 737 602 143	■															
17	Baglanti Parcasi	8 718 650 985 0	■															
18	Boru (Dönüs)	8 737 604 656	■															
20	O-Ring 17x4 L (10x)	8 716 771 154 0	■															
21	Boru (Gidis)	8 737 604 657	■															
23	Conta	8 718 669 366 0	■															
26	Ateşleme Trafosu	7 736 700 599	■															
27	Ateşleme Kablosu	8 737 902 999 0	■															
28	Sızdırmazlık kondensatı	8 716 117 038	■															
29	Sıcaklık Sensörü	8 718 688 801 0	■															
30	Sıcaklık Sensörü NTC	8 737 602 343	■															
31	Vida M5x14 (10x)	8 716 012 033 0	■															
32	Flanşlı Somun M8	8 718 682 332 0	■															
33	Conta	8 737 902 502 0	■															
34	Kablo Halkası	8 737 902 638 0	■															
39	Yansima Saci Seti	8 716 121 956	■															
40	Otomatik hava pürjörü	8 716 122 078	■															
41	Pürjör	8 716 121 869	■															
42	Dirsek Eşanjör Akış Meclisi	8 718 649 554 0	■															
43	Tespit Teli	T 002 200 54A 0	■															
44	Segman 18mm (10x)	8 718 684 699 0	■															
47	Gidis Baglanti Parçasi	8 737 604 679	■															
49	Plaka	8 716 121 838	■															

GC2201iW 24 C 23

Esanjör
Heat exchanger

2

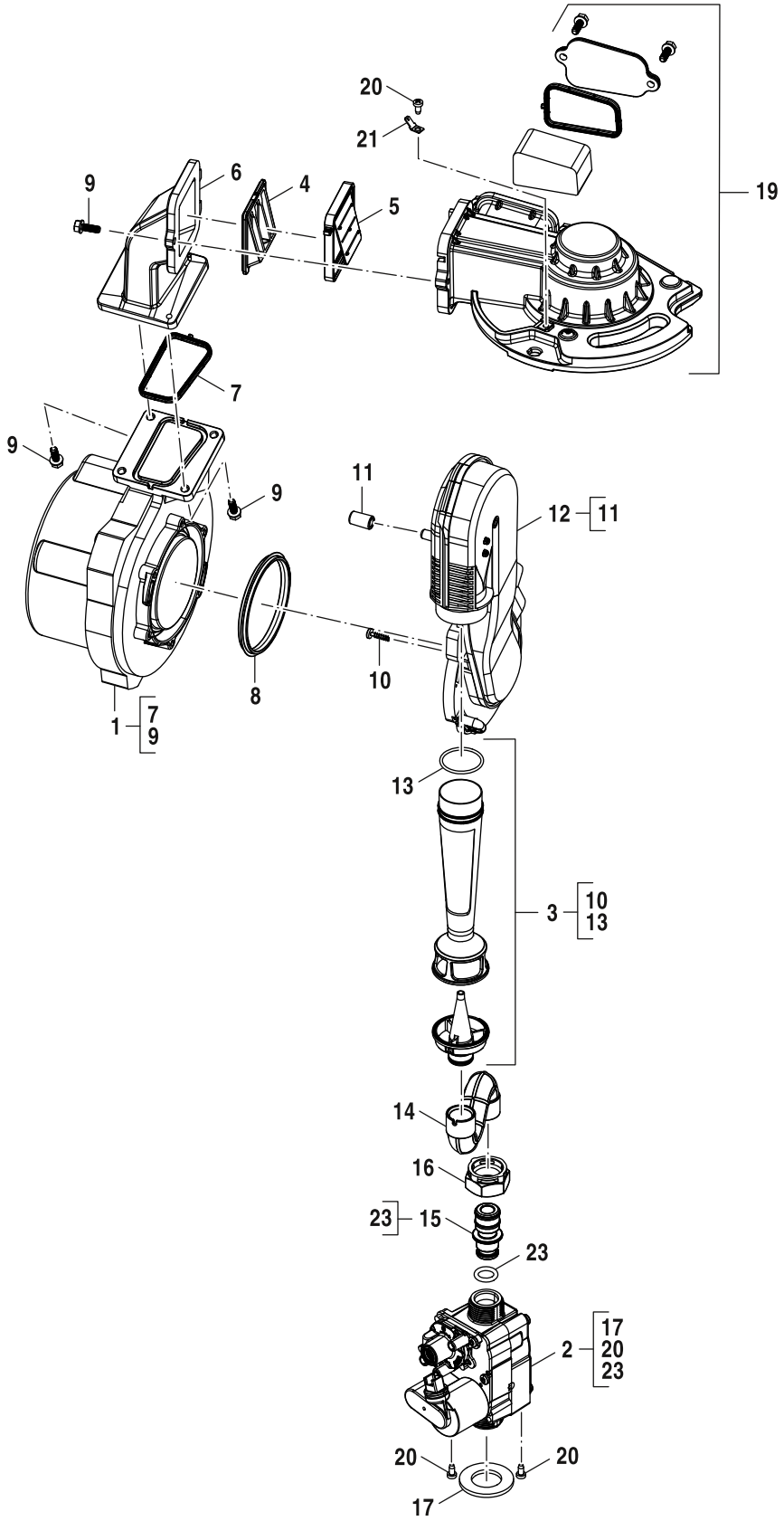

6721904830.aa.RO

3	Gaz Armatürü Gas valve	**GC2201iW 24 C 23**

Pos	Aciklamalar Description	Ordering no. Ordering no.	7-736-902-322															Notlar Remarks
1	Fan	8 718 651 784 0	■															
2	Gaz Armatürü	8 737 604 680	■															
3	Venturi D= 3,7mm	8 718 650 605 0	■															G20/G31
4	Flap mühür	8 716 117 051	■															
5	Geri Akış Önleme Sistemi	8 716 117 050	■															
6	Üfleyici kanalı	8 718 649 646 0	■															
7	Conta (Fan)	8 718 660 208 0	■															
8	Conta	7 746 001 88A 0	■															
9	Vida M5x15 (3x)	8 718 651 785 0	■															
10	Vida 4x15 (10x)	8 713 403 013 0	■															
11	Kapak (1x)	8 737 902 864 0	■															
12	Hava Emiş Borusu	8 718 650 806 0	■															
13	O-Ring NBR 29x2 (10x)	8 718 662 626 0	■															
14	Gaz Borusu	8 718 650 473 0	■															
15	Gaz memesi 30kW G20	8 718 651 018 0	■															
16	Somun	8 716 106 683 0	■															
17	Conta 41x3 (10x)	8 718 668 449 0	■															
19	Kanal gaz-hava	8 718 649 668 0	■															
20	Cıvata M4x8 (10x)	8 718 644 553 0	■															
21	Connector 6.3 Erkek Clamp Hava / G	8 718 652 196 0	■															
23	O-Ring 12x3 (10x)	8 710 205 089 0	■															

GC2201iW 24 C 23

Gaz Armatürü
Gas valve

3

Yedek Parça Listesi
Spare parts list

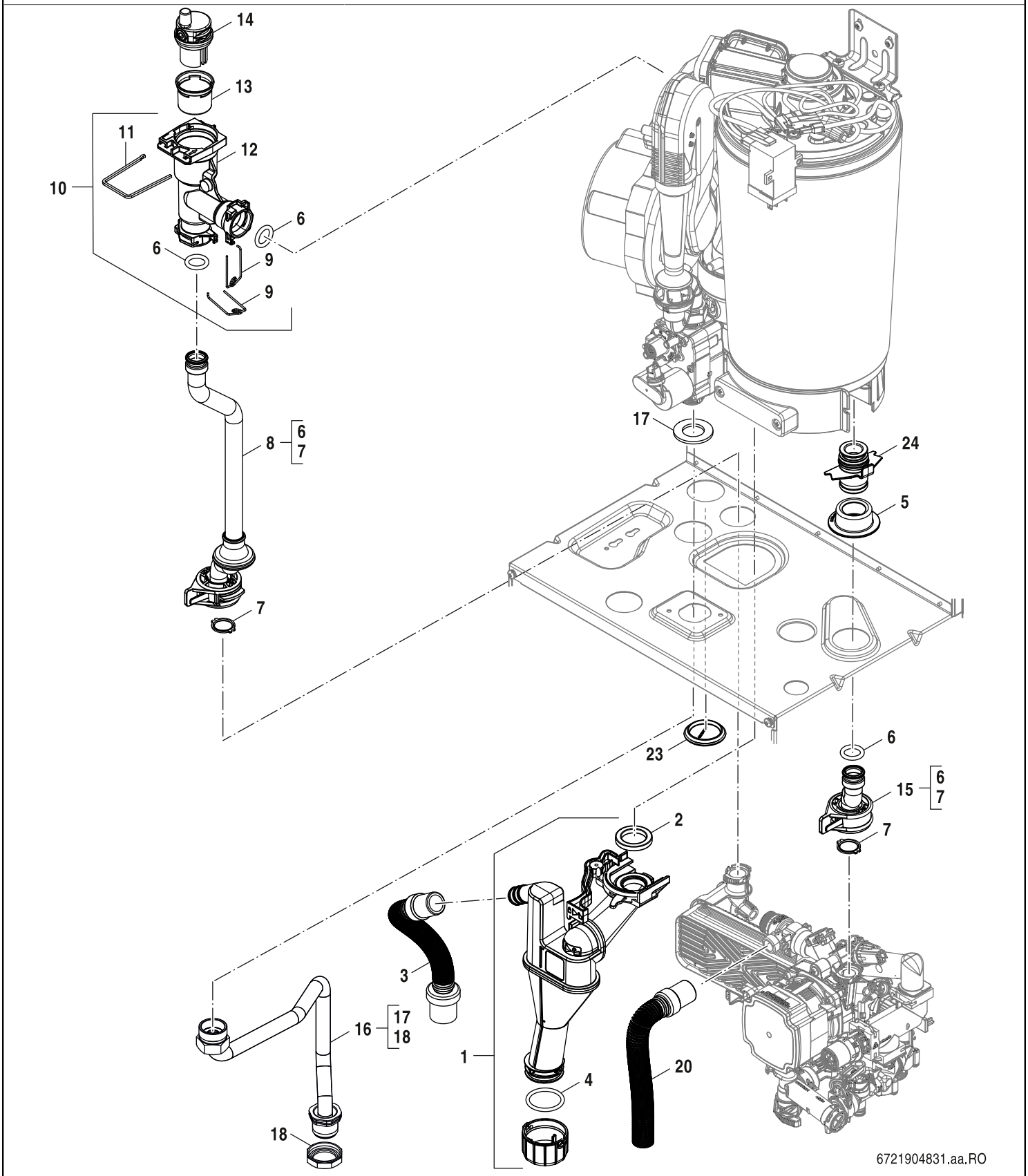

Borular
Tubes

4

GC2201iW 24 C 23

Pos	Aciklamalar Description	Ordering no. Ordering no.	7-736-902-322															Notlar Remarks
1	Sifon D03-10	8 737 603 844	■															
2	Conta	8 718 669 366 0	■															
3	Hortum (Sifon)	8 737 604 658	■															
4	O-Ring 32,92x3,53 (1x)	8 716 113 851 0	■															
5	Kurşun mühür	8 716 121 856	■															
6	O-Ring 17x4 L (10x)	8 716 771 154 0	■															
7	Conta 18.5x24.3mm (10x)	8 716 771 259 0	■															
8	Boru (Dönüs)	8 737 604 656	■															
9	Segman 18mm (10x)	8 718 684 699 0	■															
10	Gidis Baglanti Parçasi	8 737 604 679	■															
11	Tespit Teli	T 002 200 54A 0	■															
12	Dirsek Eşanjör Akış Meclisi	8 718 649 554 0	■															
13	Pürjör	8 716 121 869	■															
14	Otomatik hava pürjörü	8 716 122 078	■															
15	Boru (Gidis)	8 737 604 657	■															
16	Gaz Borusu	8 737 604 659	■															
17	Conta 41x3 (10x)	8 718 668 449 0	■															
18	Somun G3/4	8 737 605 168	■															
20	Hortum (Emniyet Ventili)	8 737 604 672	■															
23	Kapak	8 716 121 897	■															
24	Geçiş parçası	8 716 121 857	■															

GC2201iW 24 C 23

Borular
Tubes

4

Yedek Parça Listesi
Spare parts list

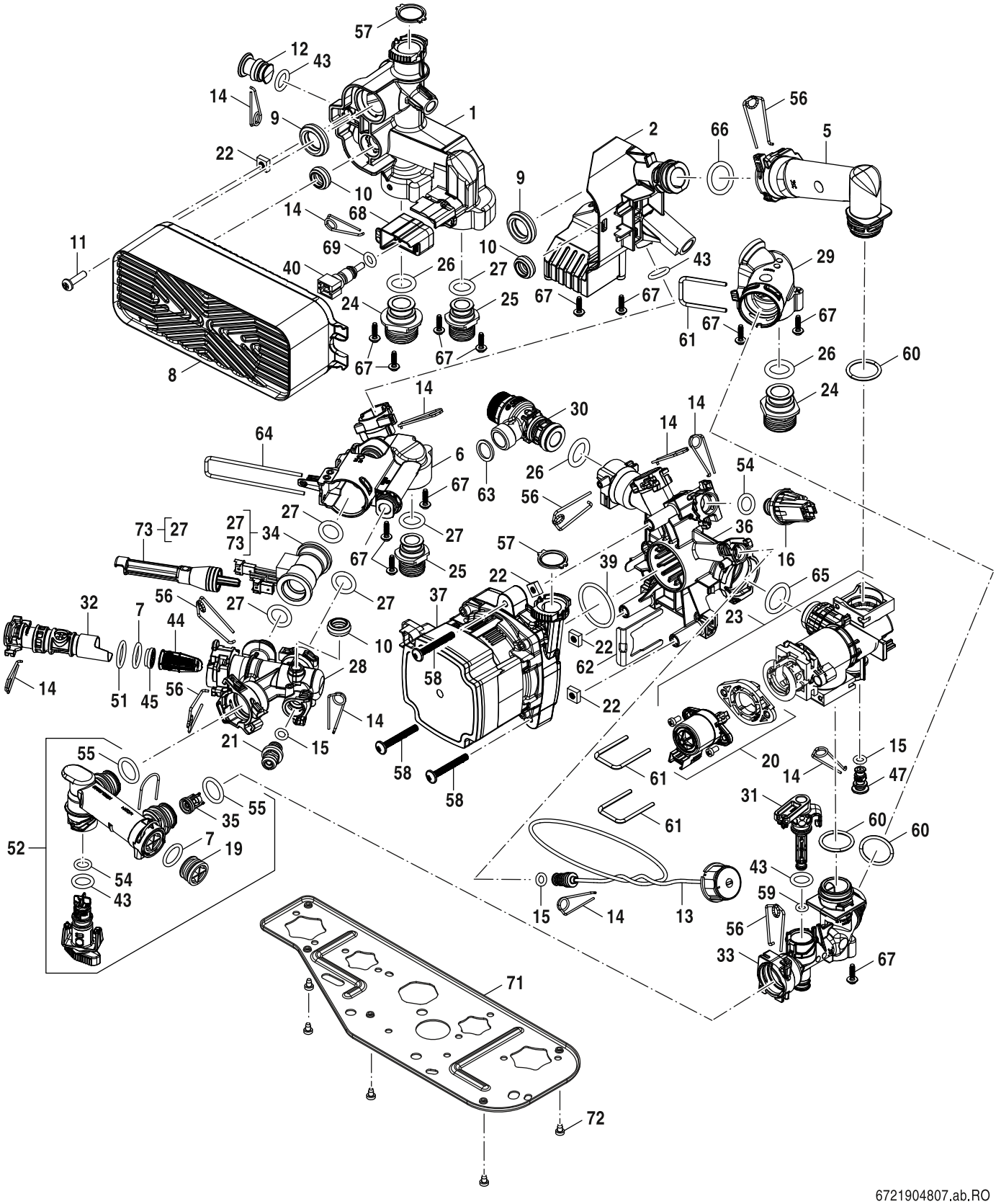

Hidrolik Grubu
Hydraulic block

5

GC2201iW 24 C 23

Pos	Aciklamalar Description	Ordering no. Ordering no.	7-736-902-322															Notlar Remarks
1	Adaptör (Plakalı Eşanjör Sol)	8 737 713 731	■															
2	Adaptör (Plakalı Eşanjör Sag)	8 737 604 403	■															
5	Adaptör	8 737 604 395	■															
6	Adaptör (Akis Sinirlayici)	8 737 604 402	■															
7	O-Ring 15,54x2,62 (10x)	8 716 771 156 0	■															
8	Plakalı Eşanjör C-PHE 16	8 718 644 625 0	■															
9	Conta 28,4x8 (10x)	8 716 771 003 0	■															
10	Conta 19,4x8 (10x)	8 716 771 325 0	■															
11	Civata M5x35 (10x)	8 718 684 954 0	■															
12	Tapa (13mm)	8 737 713 732	■															
13	Manometre	8 718 224 344 0	■															
14	Segman 10mm (10x)	8 716 771 167 0	■															
15	O-ring 6x2,5 (10x)	8 716 771 164 0	■															
16	Basınç Sensörü	8 718 651 042 0	■															
19	Tapa	8 737 604 415	■															
20	Motor (3 Yollu Vana)	8 737 602 357	■															
21	Emniyet Ventili	8 737 713 733	■															
22	Somun M5 (12x)	8 737 713 720	■															
23	3 Yollu Vana	8 737 604 397	■															
24	Baglanti 3/4"	8 737 713 734	■															
25	Baglanti 1/2"	8 737 713 735	■															
26	O-Ring 17x4 L (10x)	8 716 771 154 0	■															
27	O-Ring 13,87x3,53 L (10x)	8 716 107 439 0	■															
28	Adaptör (Akis Sensörü)	8 737 604 401	■															
29	Adaptör (CH Dönüs)	8 737 604 398	■															
30	Emniyet Ventili	8 737 604 406	■															
31	Bosaltma Muslugu	8 737 713 724	■															
32	Eleman (Susturucu)	8 737 713 729	■															
33	Adaptör (3 Yollu Vana)	8 737 604 400	■															
34	Akis Sensörü	8 737 713 706	■															
35	Çekvalf	8 737 604 418	■															
36	Adaptör (Pompa)	8 737 604 396	■															
37	Pompa UPM4L 68W ErP1	8 737 605 865	■															
39	O-Ring 34x3 (10x)	8 737 602 346	■															
40	Sıcaklık Sensörü	8 714 500 081 0	■															
43	O-Ring 12,5x3 (10x)	8 716 118 019	■															
44	Filtre	8 737 713 713	■															
45	Akis Sinirlayici E-W-LP 10L	8 737 713 715	■															
47	Tapa (3 Yollu Vana)	8 737 604 405	■															
51	O-Ring 17,12x2,62 (10x)	8 716 771 162 0	■															
52	Doldurma Musluğu	8 737 713 730	■															
53	O-Ring 12,5x3 WRAS / KTW (10x)	8 716 107 437 0	■															
54	O-Ring 9,5x2,5 (10x)	8 737 713 709	■															
55	O-Ring 17,0x3,0 (10x)	8 737 713 710	■															
56	Segman 18mm (10x)	8 737 713 711	■															
57	Conta 18.5x24.3mm (10x)	8 716 771 259 0	■															
58	Civata M5x30 + Rondela	8 716 106 452 0	■															
59	O-Ring 2,4x5,6 (10x)	8 737 713 707	■															
60	O-Ring 23,47x2,62 (10x)	8 737 602 349	■															
61	Segman (10x)	8 737 602 356	■															
62	Segman (Pompa) (10x)	8 737 713 721	■															
63	Conta 18,6x13,5x1,5 EPDM (10x)	8 716 121 476	■															

GC2201iW 24 C 23

Hidrolik Grubu
Hydraulic block

5

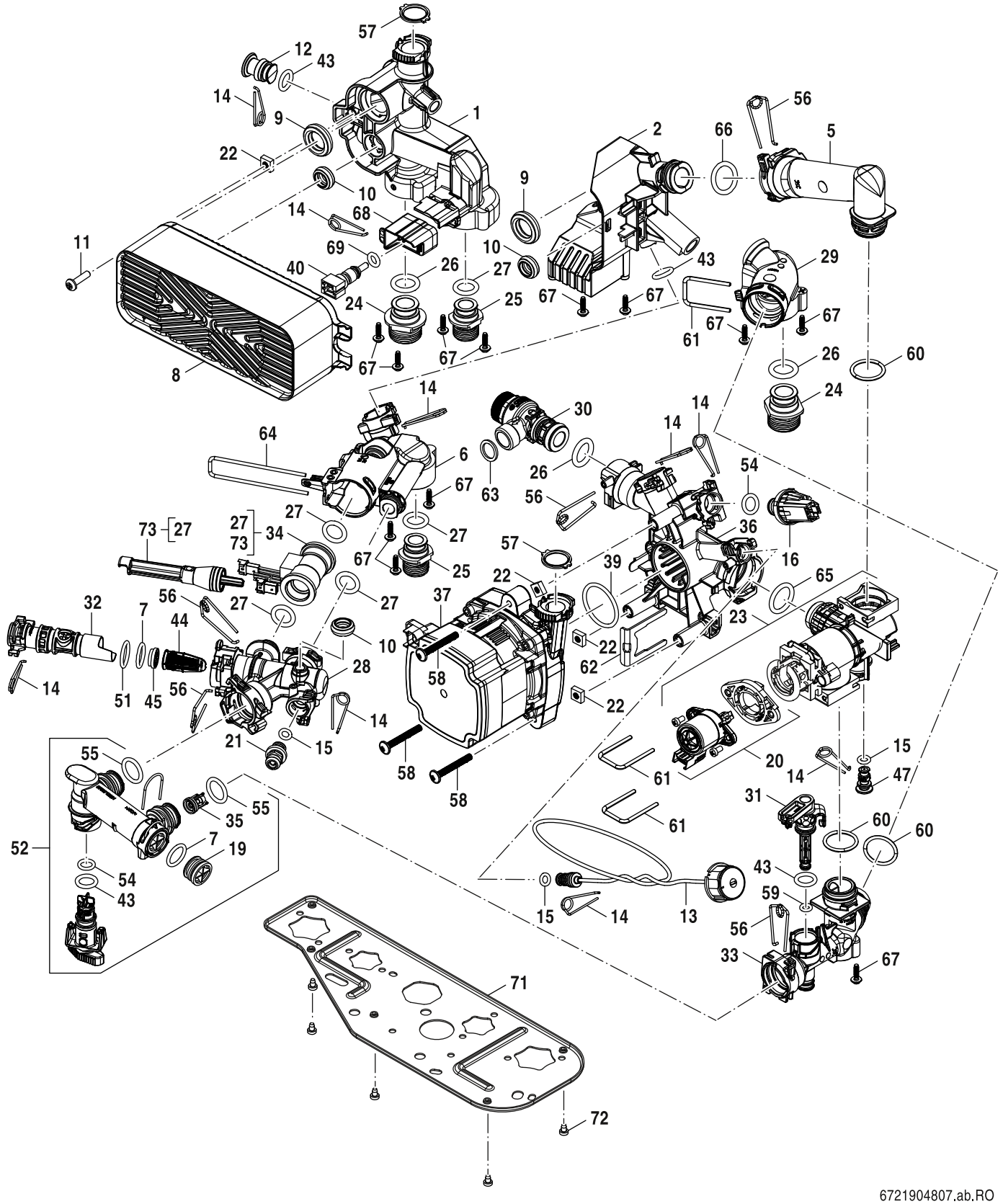

Hidrolik Grubu
Hydraulic block

5

GC2201iW 24 C 23

Pos	Aciklamalar Description	Ordering no. Ordering no.	7-736-902-322															Notlar Remarks
64	Segman (Akis Sensörü) (10x)	8 737 713 712	■															
65	O-Ring 23x4 (10x)	8 716 771 353 0	■															
66	O-Ring 20,22x3,53 EPDM (10x)	8 718 685 490 0	■															
67	Civata 4x14 (12x)	8 737 604 392	■															
68	Gövde (Sicaklik Sensörü)	8 737 604 414	■															
69	O-Ring 7,75x2,1 (10x)	8 710 205 080 0	■															
70	Tapa (Manometre)	8 737 713 722	■															
71	Montaj plakası	8 737 604 404	■															
72	Cıvata M4x6 (10x)	8 719 905 146 0	■															
73	Montaj Aracı (Akış Sensörü - O-Ring)	8 716 775 024	■															

GC2201iW 24 C 23

Hidrolik Grubu
Hydraulic block

5

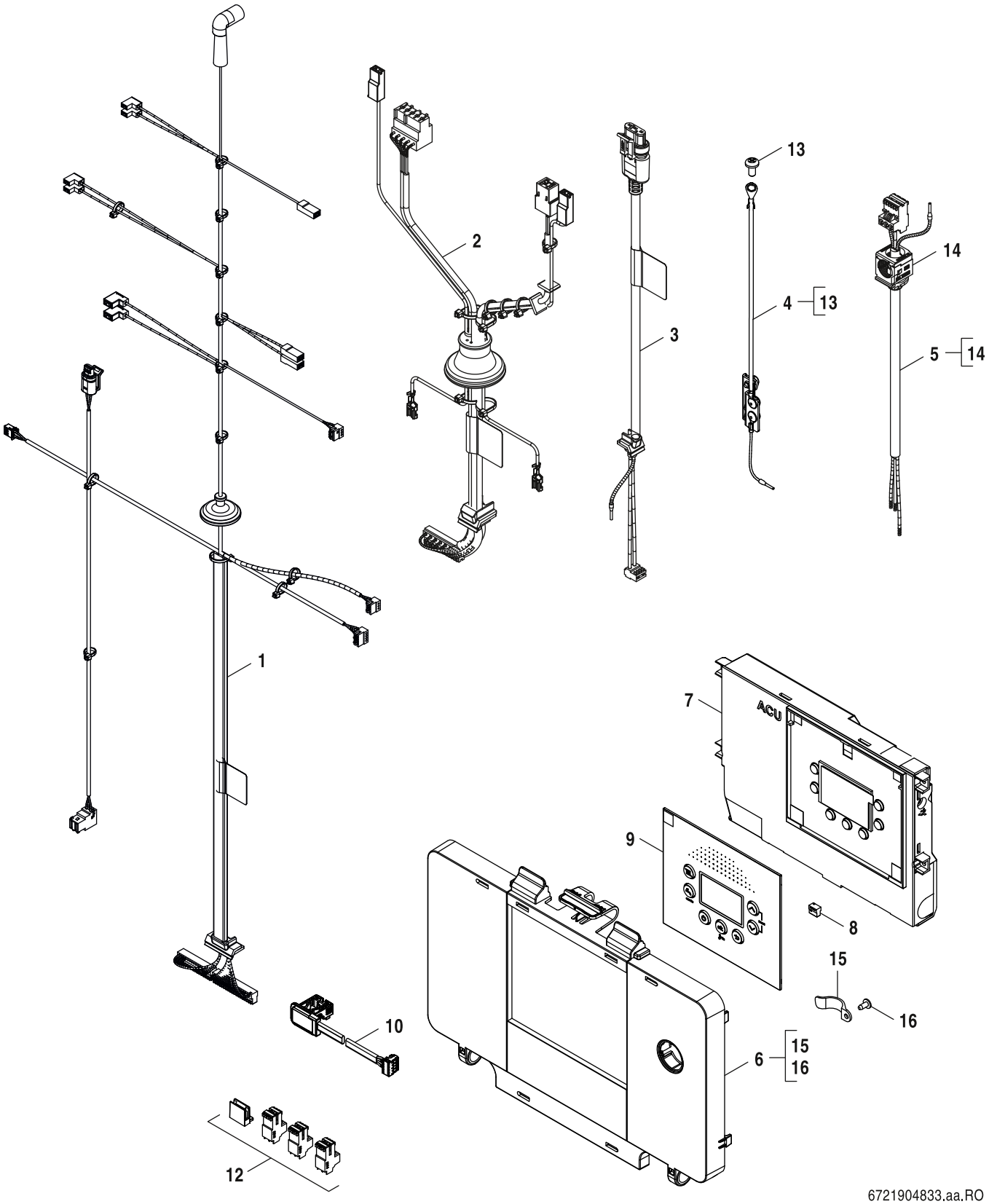

Kumanda Unitesi
Control box

6

GC2201iW 24 C 23

Pos	Aciklamalar Description	Ordering no. Ordering no.	7-736-902-322															Notlar Remarks
1	24 V Kablo Demeti	8 737 604 660	■															
2	230 V Kablo Demeti	8 737 604 661	■															
3	Pompa Kablosu	8 737 604 662	■															
4	Topraklama Hattı	8 737 604 663	■															
5	Sebeke Kablosu	8 737 604 664	■															
6	Kumanda Ünitesi Kapak	8 737 604 665	■															
7	Kontrol Ünitesi ACU-LOP 23	8 737 604 683	■															Ek olarak HCM sipariş edin (Parça 8)
8	HCM-Kod Anahtari ACP 25153 (NG)	8 737 604 525	■															
8	HCM-Kod Anahtari ACP 25167 (LPG)	8 737 604 526	■															
9	Panel	8 737 602 607	■															
10	Kablo KEY	8 737 602 652	■															
12	Baglant Klemens Seti (TR)	8 737 604 671	■															
13	Civata M5x10	2 912 451 152 0	■															
14	Sabitleme Bandi (5x)	7 736 700 162	■															
15	Kablo Kelepçesi	8 613 140 011 0	■															
16	Civata M3.5x8	2 914 211 282 0	■															
	GC2201iW LPG > NG Donusum Kit	7 736 902 348	■															
	GC2201iW NG to LPG Donusum Kit	7 736 902 349	■															

GC2201iW 24 C 23

Kumanda Unitesi
Control box

6

Ceviri Listesi
List of translations

Pos	Description				
1	**Element of construction**				
1	Front panel				
2	Side panel RHS				
3	Side panel LHS				
4	Bracket				
5	Pipe (Expansion vessel)				
6	Expansion vessel				
7	Cover plate				
8	Support (Expansion vessel)				
9	Support (Expansion vessel)				
10	Clip (5x)				
11	O-ring 12,37x2,62 EPDM				
12	Facia				
14	Gasket 18,6x13,5x1,5 (10x)				
15	Seal Ø70mm				
16	Cap (1x)				
17	Flue pipe (bottom)				
18	Flue pipe (top)				
19	Seal Ø80mm				
20	Screw B4x10-St-H				
21	Covering sheet				
22	Support (Flue pipe)				
23	Screw No.10x20 Hex Flange Head (3x)				
24	Clip 4,8mm (10x)				
25	Seal				
26	Casing (KEY)				
27	Bracket U				
28	Screw M5x15 (10x)				
29	Bracket (Ip PluX)				
30	Screw M4x6 (10x)				
31	Lock (PluX)				
32	Cover (Ip PluX)				

Ceviri Listesi
List of translations

Pos	Description				
33	Cable KEY				
2	**Element of construction**				
1	Heating block 30 kW				
2	Electrode set				
3	Seal burner				
4	Burner 30 kW				
5	Displacement body				
6	Lower baffle				
7	Seal				
9	Lock Condensate receiver				
10	Nut				
11	Temperature limiter				
13	Temperature limiter				
14	Seal 18.5x24.3mm (10x)				
15	Screw M5x8 (10x)				
16	Screw M6x18 (10x)				
17	Fixing bracket				
18	Pipe (Return)				
20	O-ring 17x4 L (10x)				
21	Pipe (Supply)				
23	Seal				
26	Ignition transformer				
27	Ignition Cable				
28	Seal Condensate Tray				
29	Temperature sensor				
30	Temperature sensor NTC				
31	Screw M5x14 (10x)				
32	Nut M8 with flange				
33	Seal				
34	Grommet				
39	Baffle Set				
40	Air Vent				

Ceviri Listesi
List of translations

Pos	Description				
41	Air Vent Cup				
42	Elbow Heat Exchanger Flow Assembly				
43	Clip				
44	Clip 18mm (10x)				
47	Supply manifold				
49	Plate				
3	**Element of construction**				
1	Fan				
2	Gas valve				
3	Venturi D= 3,7mm				
4	Flap Guard				
5	Non-return valve				
6	Fan elbow				
7	Seal (Fan)				
8	Seal				
9	Screw M5x15 (3x)				
10	Screw 4x15 (10x)				
11	Cap (1x)				
12	Suction pipe				
13	O-ring NBR 29x2 (10x)				
14	Tube - Gas Supply				
15	Orifice 30kW G20 5.5mm				
16	Nut				
17	Gasket 41x3 (10x)				
19	Duct gas-air mixture				
20	Screw M4x8 (10x)				
21	Connector 6.3 Male				
23	O-ring 12x3 (10x)				
4	**Element of construction**				
1	Siphon D03-10				
2	Seal				
3	Hose (Siphon)				

Ceviri Listesi
List of translations

Pos	Description				
4	O-ring 32,92x3,53 (1x)				
5	Seal				
6	O-ring 17x4 L (10x)				
7	Seal 18.5x24.3mm (10x)				
8	Pipe (Return)				
9	Clip 18mm (10x)				
10	Supply manifold				
11	Clip				
12	Elbow Heat Exchanger Flow Assembly				
13	Air Vent Cup				
14	Air Vent				
15	Pipe (Supply)				
16	Gas pipe				
17	Gasket 41x3 (10x)				
18	Nut G3/4				
20	Hose (Pressure relief valve)				
23	Blanking Cap				
24	Adaptor				
5	**Element of construction**				
1	Adapter (PHE left)				
2	Adapter (PHE right)				
5	Adapter (PHE/3WV)				
6	Adapter (Flow limiter)				
7	O-ring 15,54x2,62 (10x)				
8	Plate heat exchanger C-PHE 16				
9	Seal 28,4x8 (10x)				
10	Seal 19,4x8 (10x)				
11	Screw M5x35 (10x)				
12	Plug (13mm)				
13	Pressure gauge				
14	Clip 10mm (10x)				
15	O-ring 6x2,5 (10x)				

Ceviri Listesi
List of translations

Pos	Description				
16	Pressure sensor				
19	Plug				
20	Motor (3-way valve)				
21	Pressure relief valve				
22	Nut M5 (12x)				
23	3-way valve				
24	Fitting 3/4"				
25	Fitting 1/2"				
26	O-ring 17x4 L (10x)				
27	O-ring 13,87x3,53 L (10x)				
28	Adapter (Flow sensor)				
29	Adapter (Return CH)				
30	Pressure relief valve				
31	Drain cock				
32	Cartridge (Sound absorber)				
33	Adapter (3-way valve)				
34	Flow sensor				
35	Non-return valve				
36	Adapter (Pump)				
37	Pump UPM4L 68W ErP1				
39	O-ring 34x3 (10x)				
40	Temperature sensor				
43	O-ring 12,5x3 (10x)				
44	Filter				
45	Flow limiter E-W-LP 10L Blue				
47	Plug (3-way valve)				
51	O-ring 17,12x2,62 (10x)				
52	Fill cock				
53	O-ring 12,5x3 WRAS / KTW (10x)				
54	O-ring 9,5x2,5 (10x)				
55	O-ring 17,0x3,0 (10x)				
56	Clip 18mm (10x)				

Ceviri Listesi
List of translations

Pos	Description				
57	Seal 18.5x24.3mm (10x)				
58	Screw M5x30 + Washer				
59	O-ring 2,4x5,6 (10x)				
60	O-ring 23,47x2,62 (10x)				
61	Clip (10x)				
62	Clip (Pump) (10x)				
63	Gasket 18,6x13,5x1,5 EPDM (10x)				
64	Clip (Flow sensor) (10x)				
65	O-ring 23x4 (10x)				
66	O-ring 20,22x3,53 EPDM (10x)				
67	Screw 4x14 (12x)				
68	Casing (Temperature sensor)				
69	O-ring 7,75x2,1 (10x)				
70	Plug (Pressure gauge)				
71	Mounting plate				
72	Screw M4x6 (10x)				
73	Mounting Tool (Flow sensor - O-ring)				
6	**Element of construction**				
1	Cable harness LV				
2	Cable harness HV				
3	Pump cable				
4	Earth cable				
5	Mains cable				
6	Facia control panel				
7	Control unit ACU-LOP 23				
8	Code plug ACP 25153 (NG)				
8	Code plug ACP 25167 (LPG)				
9	Facia				
10	Cable KEY				
12	Connector set (TR)				
13	Screw M5 x 10 Pan Head Pozi ZP				
14	Strain relief (5x)				

Ceviri Listesi
List of translations

Pos	Description				
15	Cable clip				
16	Screw M3.5x8				
	GC2201iW LPG to NG Conversion Kit				
	GC2201iW NG to LPG Conversion Kit				

Cihaz Cesitleri
Types of appliances

Cihaz Appliance	Ordering no. Ordering no.	Ulke Country	Notlar Remarks
GC2201iW 24 C 23	7 736 902 322	TR	

Bosch Thermotechnik GmbH
Junkersstr. 20-24
D-73249 Wernau / Germany
www.bosch-homecomfort.com